OFFICIAL UK DISTRIBUTORS FOR:

Fuji Electric

BÜHLER TECHNOLOGIES

DRM Technic

Suppliers of Gas Analysis Equipment

GAS 222.31 ATEX SAMPLE GAS PROBE

In gas analysis, the sample point is a critical interface between the process and the analysis system. The GAS 222 series of probes have a robust modular design, come assembled-to-order, are easy to install and have low operational costs.

FEATURES

Heated sample gas probe with shut off valve, internal filter and weather protection shield
Effective insulation | Self-regulating at up to 90 °C | For dust concentrations of up to 200 g/m^3
Approved for use in Zone 1, 21 and for gas sampling from Zone 0, 20

SPECIFICATIONS

Product No.	GAS 222.31 ATEX
Material	1.4571; ball valve: 1.4408
Seals	PTFE, Graphite, 1.4404 SS
Max. Working Pressure	6 bar
Max. Flow Rate	1000 l/h
Max. Inlet Tempertature Process Media	135 °C
Voltage	230 V, 50/60 Hz; or 115 V, 50/60Hz
Temperature	Self-regulating approx. 90 °C
External circuit breaker	Type C: 2 A for 230 V, 50/60 Hz 3 A for 115 V, 50/60 Hz
Ambient Temperature	- 20 to + 50 °C
Filter Type	In-situ
Ex-marking of the basic unit	1 GD / 2 GD T4 T130°C

OPTIONS AND ACCESSORIES

Please see the "GAS 222 ACCESSORIES" datasheet for our full range of accessories

TECHNICAL DRAWINGS

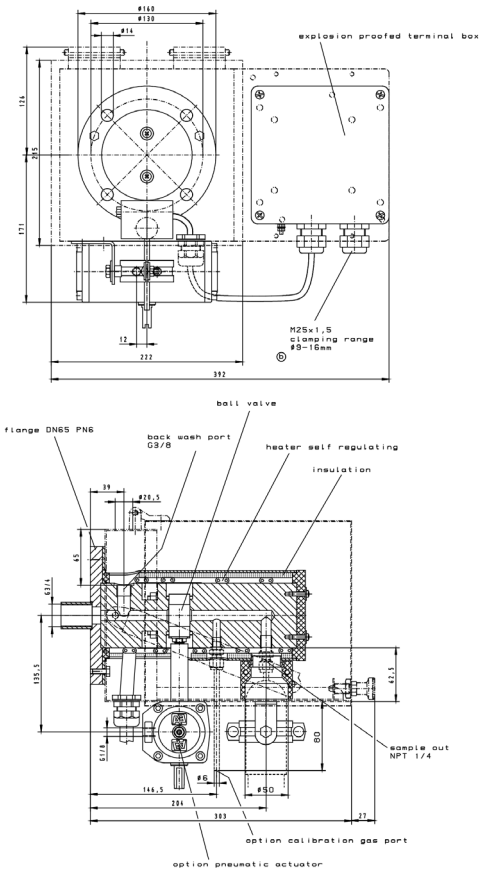

CONTACT US: DRM Technic, 4 Cherry Orchard, Newcastle-under-Lyme, Staffordshire, UK, ST5 2UB
DRM/G22231/190216/001 Tel: +44 (0) 1782 638491 | Email: sales@drmtechnic.com | Web: www.drmtechnic.com DRM/G22231/190216/001